USB

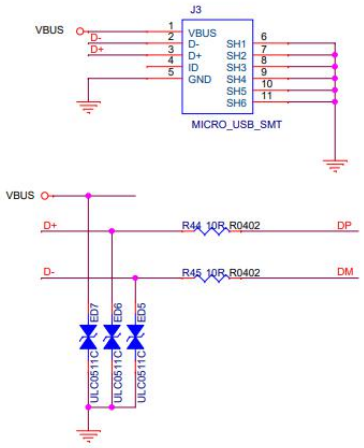
J3
VBUS
D-
D+
ID
GND
SH1
SH2
SH3
SH4
SH5
SH6
MICRO_USB_SMT
R44 10R R0402
R45 10R R0402
DP
DM
ED7
ED6
ED5
ULC0511C

UART

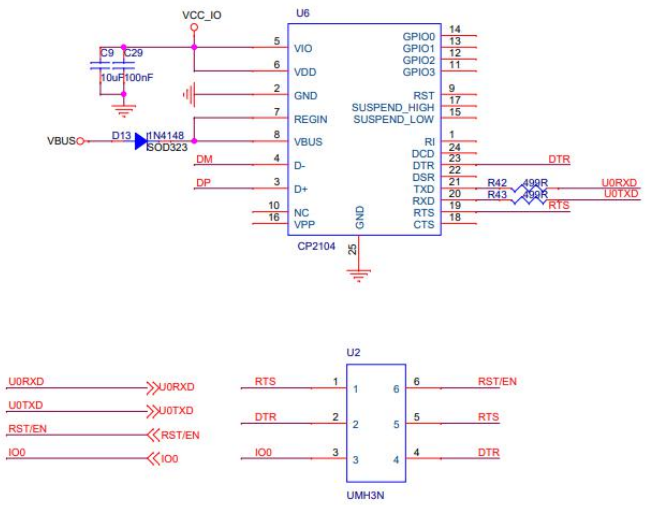
VCC_IO
U6
C9
C29
10uF
100nF
VIO
VDD
GND
REGIN
VBUS
D-
D+
NC
VPP
GPIO0
GPIO1
GPIO2
GPIO3
RST
SUSPEND_HIGH
SUSPEND_LOW
RI
DCD
DTR
DSR
TXD
RXD
RTS
CTS
D13
1N4148
SOD323
DM
DP
R42 499R
R43 499R
U0RXD
U0TXD
CP2104
U2
RST/EN
IO0
UMH3N

RST

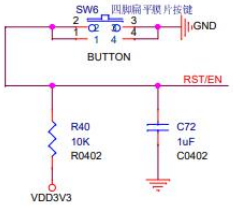
SW6
四脚贴平贴片按键
GND
BUTTON
RST/EN
R40
10K
R0402
C72
1uF
C0402
VDD3V3

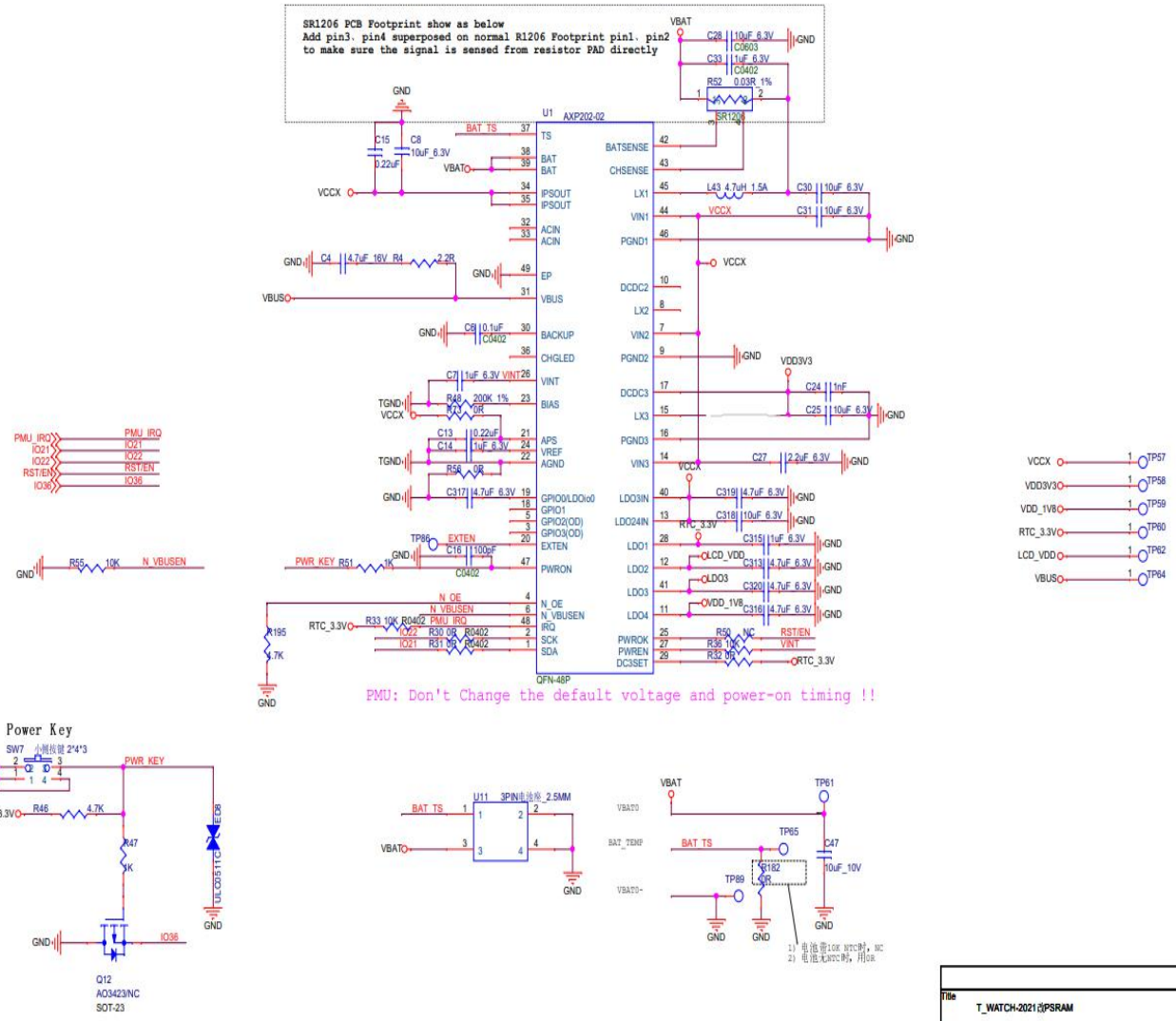

Title	T_WATCH-2021改PSRAM
Size B	Document Number AXP202

ESP32 Module:with 1.8V Flash & SRAM
The operating voltage for signals marked in blue is 1.8V.

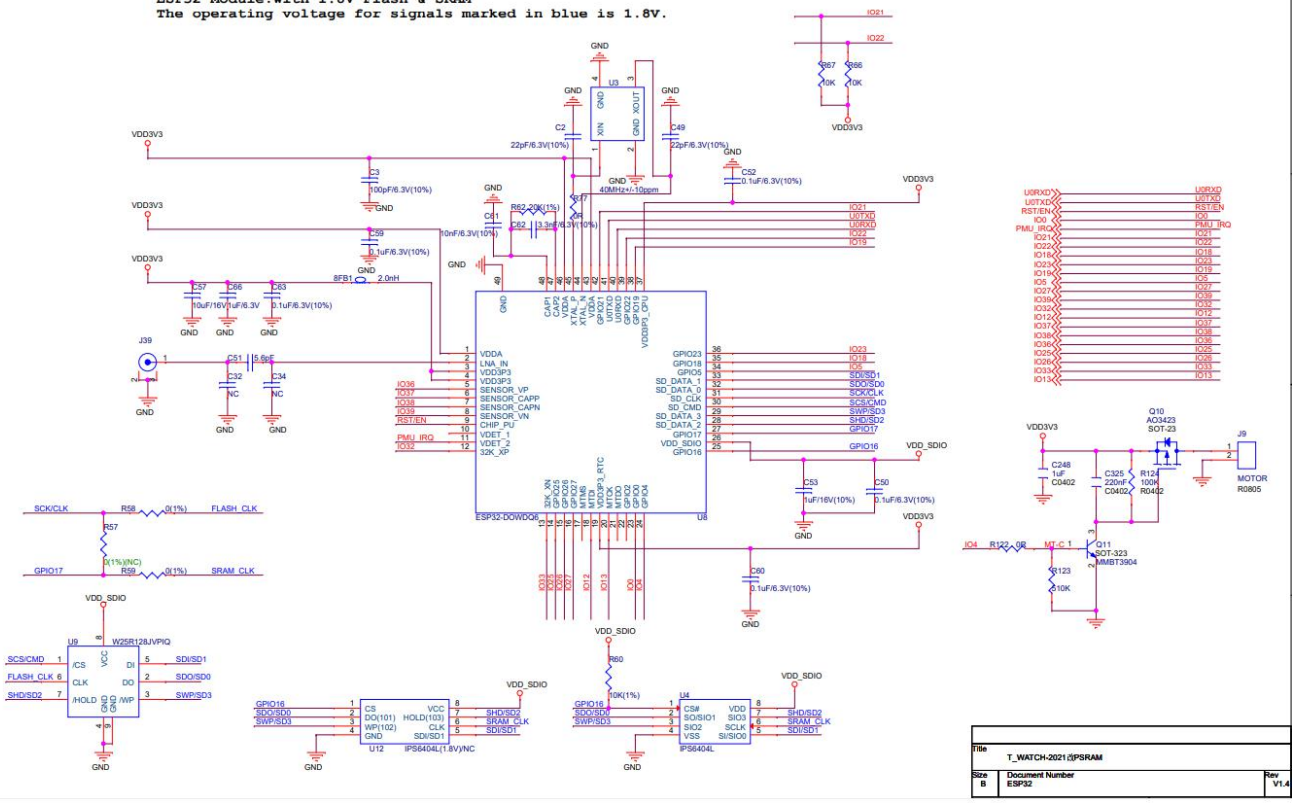

Title	T_WATCH-2021@PSRAM	
Size B	Document Number ESP32	Rev V1.4

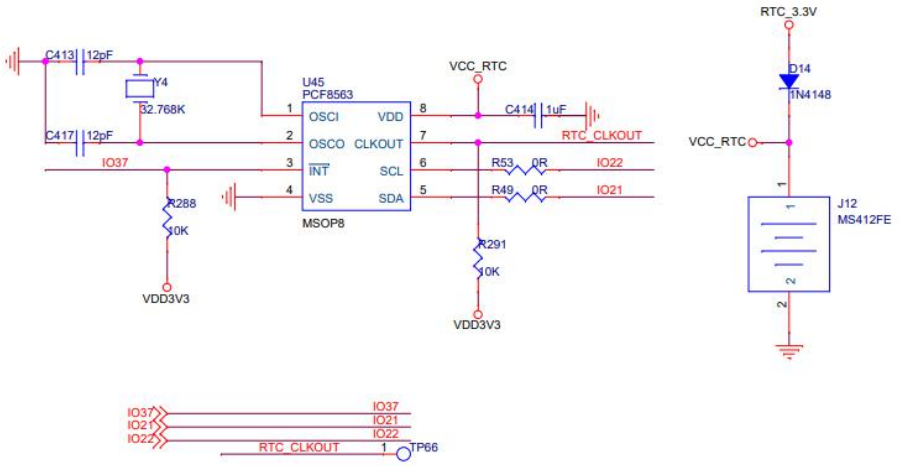

Title	T_WATCH-2021改PSRAM	
Size A	Document Number RTC	Rev V1.4
Date: Wednesday, July 01, 2020	Sheet 4 of 6	

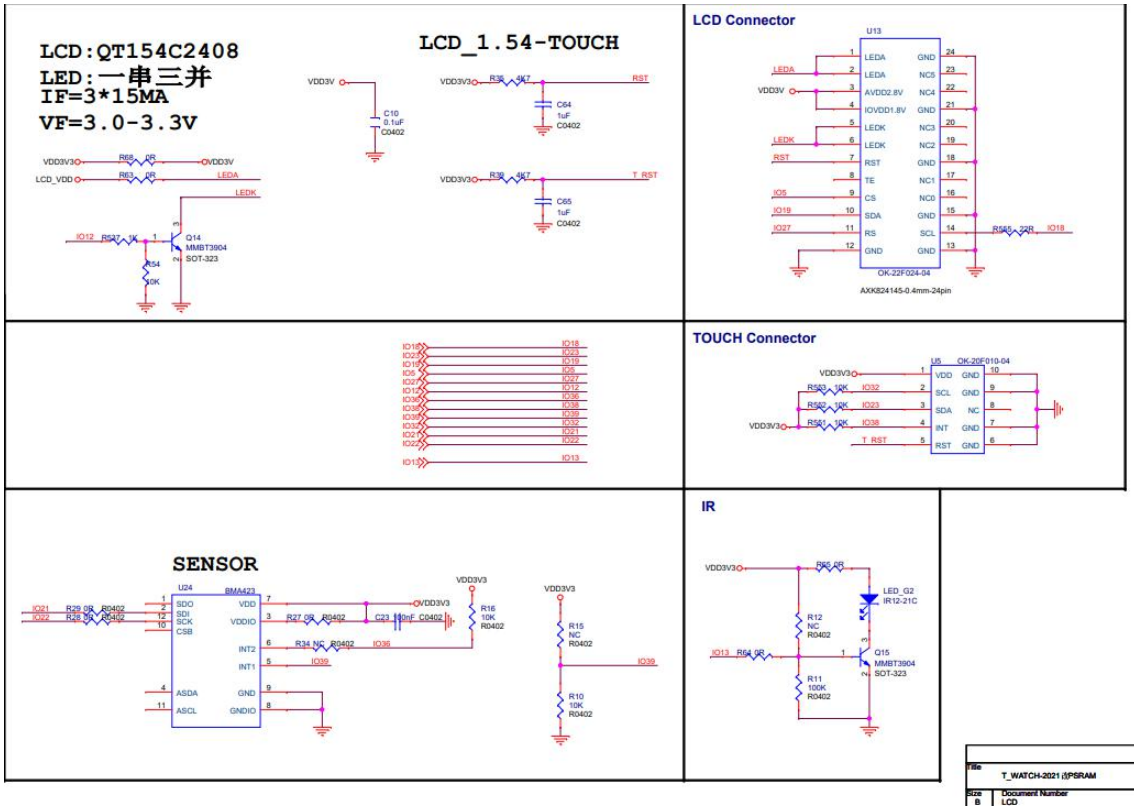

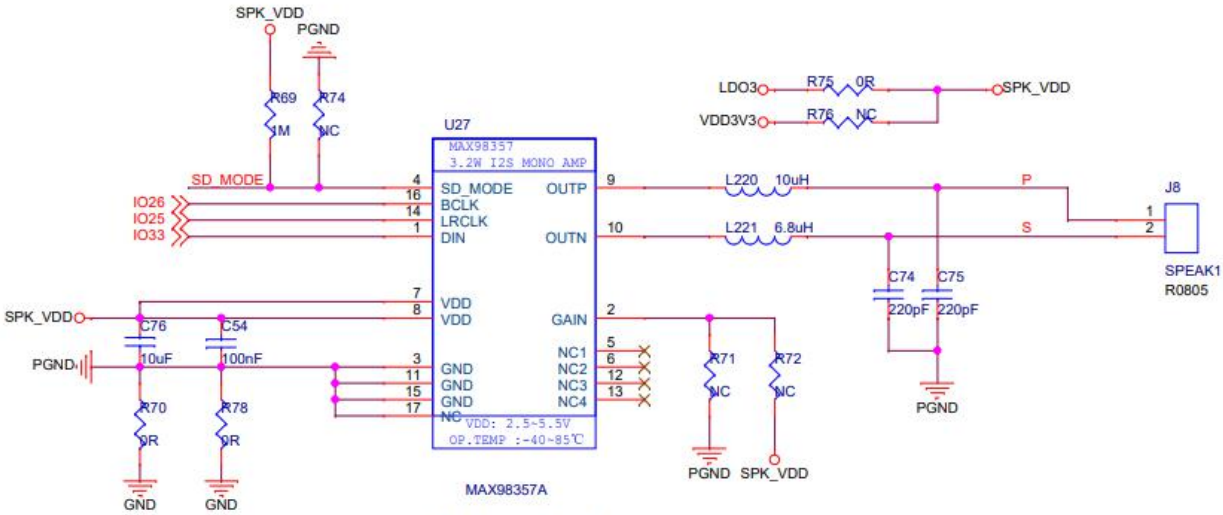

Min:3mA

Max:120mA